Table 2.3: Engine specifications for the Geoprobe® Model 7822DT.		
Engine Type	Kubota® 4-Cylinder Turbo Diesel	
Engine Power (gross intermittent - SAE J1995)	59.0 hp @ 2,700 rpm	44.0 kW @ 2,700 rpm
Engine Power (net continuous - SAE J1349)	47.9 hp @ 2,700 rpm	35.8 kW @ 2,700 rpm
Cooling System	Liquid	
Fuel Capacity (diesel)	17 gal.	64 L
Oil Capacity	2.5 gal.	9.5 L

Table 2.4: Hydraulic hammer specifications for the Geoprobe® Model 7822DT.		
Hammer System	GH64	
Percussion Rate	32 Hz	
Torque - Clockwise Rotation* (Low Torque / High Speed) (High Torque / Low Speed)	 225 ft-lb 450 ft-lb	 305 N·m 310 N·m
Speed - Clockwise Rotation* (Low Speed / High Torque) (High Speed / Low Torque)	 0-250 rpm 0-500 rpm	
Torque - Counterclockwise Rotation*	600 ft-lb	813 N·m

*Rotation direction as viewed from shaft end.

Table 2.5: Optional accessories specifications for the Geoprobe® Model 7822DT.		
Hydraulic Winch Rating	2,350 lb	1066 kg
Hydraulic Winch Speed	0-126 fpm	0-38 m/min
GA4000 Augerhead - Torque (Low Torque / High Speed) (High Torque / Low Speed)	 2,000 ft-lb 4,000 ft-lb	 2712 N·m 5423 N·m
GA4000 Augerhead - Speed (Low Speed / High Torque) (High Speed / Low Torque)	 0-95 RPM 0-150 RPM	

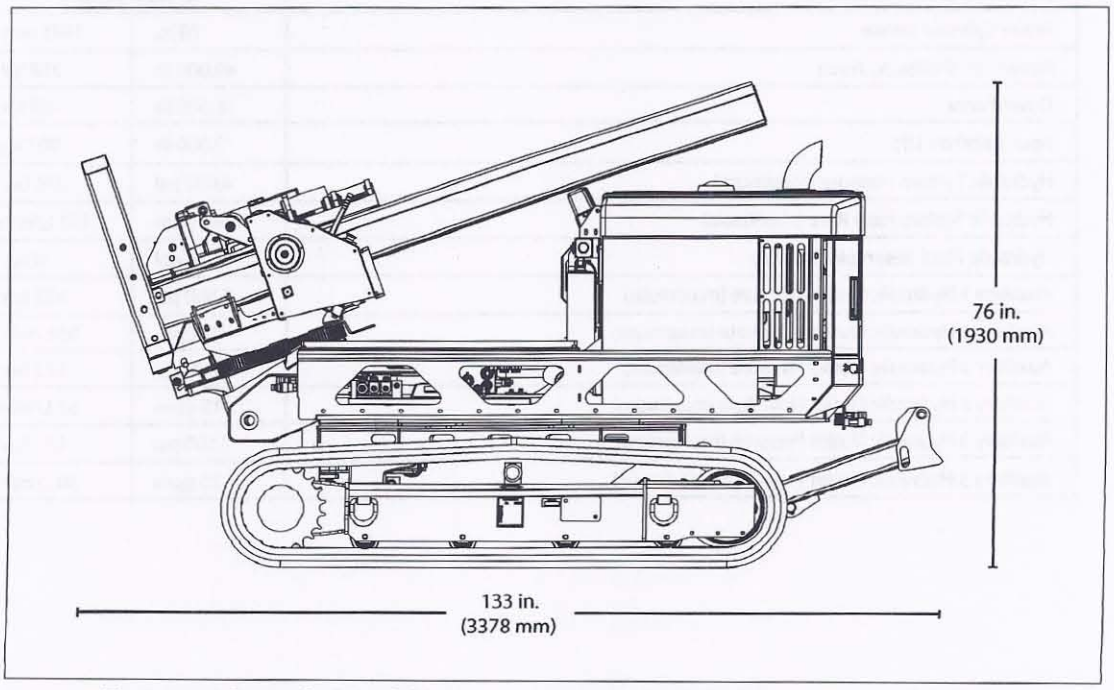

Figure 2.1: Geoprobe® Model 7822DT -- Probe derrick folded for transport, side view.

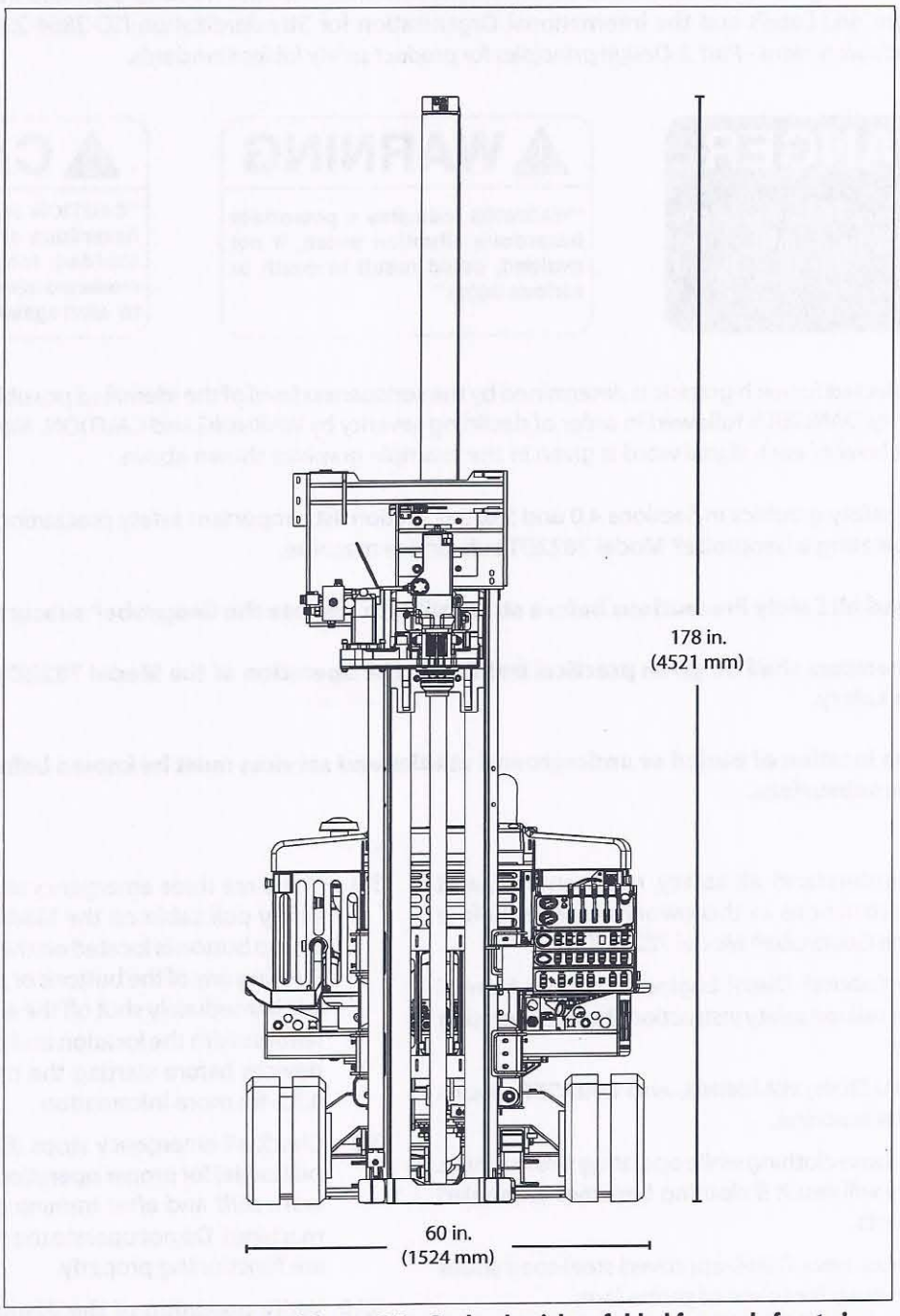

Figure 2.2: Geoprobe® Model 7822DT -- Probe derrick unfolded for work, front view.

Geoprobe Systems®

EC Declaration of Conformity

I do hereby declare that the Geoprobe® Model 7822DT drill rig, cited below, conforms to the requirements of EC Directives 2000/14 and 2006/42.

Ryan J. Kejr
Product Engineer
Geoprobe Systems®

Salina, KS 11/2/2011
Place and date of signature

	Product
Equipment[1]:	Drill rig for percussive or rotary drilling. Not for rotary percussive drilling.
Manufacturer's Trade Name:	Geoprobe® Model 7822DT
Type:	Machine for environmental and geotechnical investigations
Serial Number:	Z11269T7822
Net Installed Power[2]:	35.8 kW (47.9 hp) @ 2700 rpm
Article 12 Equipment?[3]:	No. The equipment (drill rig) is listed in Article 13.

(1) As defined in Directive 2000/14/EC, Annex I, Item 17
(2) SAE net continuous power (SAE J1349)
(3) Drill rigs are listed in Directive 2000/14/EC, Article 13 and are therefore subject to noise marking only

	Manufacturer	**Distributor**
Name:	Geoprobe Systems®	Geoprobe Environmental Technologies, s.a./n.v.
Address:	1835 Wall Street Salina, Kansas 67401 USA	Rue Bruyére St. Jean, 104 1410 Waterloo Belgium
Telephone and Fax:	785-825-1842 (TEL) 785-825-2097 (FAX)	32-(0)2-351 35 82 (TEL) 32-(0)475-41 30 07 (GSM) 32-(0)2-351 35 90 (FAX)
E-mail:	info@geoprobe.com	michel.rogge@geoprobe.be
Web Site:	www.geoprobe.com	www.geoprobe.be
VAT:	(NA)	BE 452 895 968

The machine specified on Page 1 conforms to the following directives:

2000/14/EC.....Directive of the European Parliament and of the Council of 8 May 2000 on the approximation of the laws of the Member States relating to the noise emission in the environment by equipment for use outdoors.

2006/42/EC.....Directive of the European Parliament and of the Council of 17 May 2006 on machinery, and amending Directive 95/16/EC (recast).

The following standards were used to determine compliance with EC Directives 2000/14 and 2006/42:

EN 418: 1992 .....Emergency stop equipment

EN 791: 1995 .....Drill Rigs – Safety

EN 982: 1996 .....Safety of machinery – Safety requirements for fluid power systems and their components – Hydraulics

IEC 60204-1: 2005.....Safety of machinery – Electrical equipment of machines

IEC 60947-5-1: 2003.....Control circuit devices and switching elements – Electromechanical control circuit devices

ISO 3744: 1994(E).....Acoustics – Determination of sound power levels of noise sources using sound pressure – Engineering method in an essentially free field over a reflecting plane

ISO 11201: 1995 .....Acoustics – Noise emitted by machinery and equipment – Measurement of emission sound pressure levels at a work station and at other specified positions – Engineering method in an essentially free field over a reflecting plane

ISO 13849-1: 2006 .....Safety of machinery – Safety-related parts of control systems – Part 1: General principles for design

ISO 13849-2: 2003 .....Safety of machinery – Safety-related parts of control systems – Part2: Validation

As required by Directive 2000/14/EC, the measured sound power level and guaranteed sound power level for the Geoprobe® Model 7822DT machine are reported below. These levels were determined in accordance with noise emission standard ISO 3744:1994(E) under operating conditions specified in EN 791: 1995 as directed by Annex III, Part B, item 17 of Directive 2000/14/EC.

Sound power levels for the Geoprobe® Model 7822DT machine

Measured Sound Power Level(1): L_{WA} = 118 dB

Guaranteed Sound Power Level(2): L_{WA} = 123 dB

(1) Maximum level measured with engine at full rpm and hammer operating

(2) Using an A-weighted standard deviation of 1.5 dB, the guaranteed sound power level is reported with 99.7% confidence

The technical documentation required by Directives 2000/14/EC and 2006/42/EC is maintained by Troy M. Bourbon at the corporate headquarters of Geoprobe Systems®, 1835 Wall Street, Salina, Kansas 67401, USA.